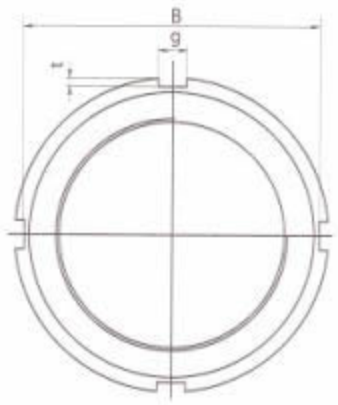

- 材质：DIN C45
- 硬度：HRC 28–32°
- 螺纹精度：ISO 6H
- 端面偏摆：0.005

型号	螺纹和间距	尺寸						
		D	d	d1	B	h	g	t
AN 00	M 10 × 0.75	18	13.5	10.5	14	4	3	2
AN 01	M 12 × 1.0	22	17	12.5	18	4	3	2
AN 02	M 15 × 1.0	25	20	15.5	21	5	4	2
AN 03	M 17 × 1.0	28	23	17.5	24	5	4	2
AN 04	M 20 × 1.0	32	26	20.5	28	6	4	2
AN 05	M 25 × 1.5	38	32	25.8	34	7	5	2
AN 06	M 30 × 1.5	45	38	30.8	41	7	5	2
AN 07	M 35 × 1.5	52	44	35.8	48	8	5	2
AN 08	M 40 × 1.5	58	50	40.8	53	9	6	2.5
AN 09	M 45 × 1.5	65	56	45.8	60	10	6	2.5
AN 10	M 50 × 1.5	70	61	50.8	65	11	6	2.5
AN 11	M 55 × 2.0	75	67	56	69	11	7	3
AN 12	M 60 × 2.0	80	73	61	74	11	7	3
AN 13	M 65 × 2.0	85	78	66	79	12	7	3
AN 14	M 70 × 2.0	92	84	71	85	12	8	3.5
AN 15	M 75 × 2.0	98	90	76	91	13	8	3.5
AN 16	M 80 × 2.0	105	95	81	98	15	8	3.5
AN 17	M 85 × 2.0	110	102	86	103	16	8	3.5
AN 18	M 90 × 2.0	120	108	91	112	16	10	4
AN 19	M 95 × 2.0	125	113	96	117	17	10	4
AN 20	M 100 × 2.0	130	120	101	122	18	10	4
AN 21	M 105 × 2.0	140	126	106	130	18	12	5
AN 22	M 110 × 2.0	145	133	111	135	19	12	5
AN 23	M 115 × 2.0	150	137	116	140	19	12	5
AN 24	M 120 × 2.0	155	138	121	145	20	12	5
AN 25	M 125 × 2.0	160	148	126	150	21	12	5
AN 26	M 130 × 2.0	165	149	131	155	21	12	5
AN 27	M 135 × 2.0	175	160	136	163	22	14	6
AN 28	M 140 × 2.0	180	160	141	168	22	14	6
AN 29	M 145 × 2.0	190	172	146	178	24	14	6
AN 30	M 150 × 2.0	195	172	151	183	24	14	6
AN 31	M 155 × 2.0	200	182	156.5	186	25	16	7
AN 32	M 160 × 3.0	210	182	161.5	196	25	16	7
AN 33	M 165 × 3.0	210	193	166.5	196	26	16	7
AN 34	M 170 × 3.0	220	193	171.5	206	26	16	7
AN 36	M 180 × 3.0	230	203	181.5	214	27	18	8
AN 38	M 190 × 3.0	240	214	191.5	224	28	18	8
AN 40	M 200 × 3.0	250	226	201.5	234	29	18	8

备注
1. NUT 承接 M2 ~ M1000 各种材质、非标准螺距以及特殊外型螺母的订制
2. 如您订购左旋螺纹之螺母时，请加注 –L　例：NFM30 × 1.5 P–L
3. 以上资料仅供参考，本公司拥有修改之权利

1Nm=10.2kgf.cm=0.73lb.ft