YOKE TYPE TRACK ROLLERS

케이지형, mm치수, 내륜, 외륜 및 측판 분할형
PRECISION CAGE TYPE
METRIC DIMENSION
SEPARABLE INNER AND OUTER RING AND RETAINING WASHER

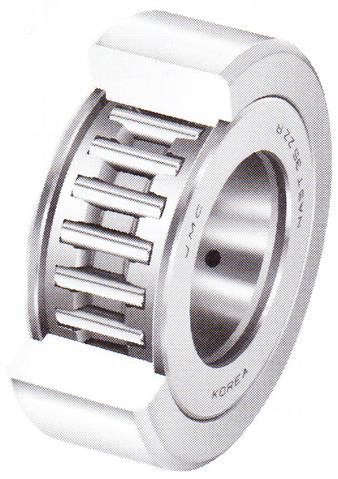

NAST..ZZ

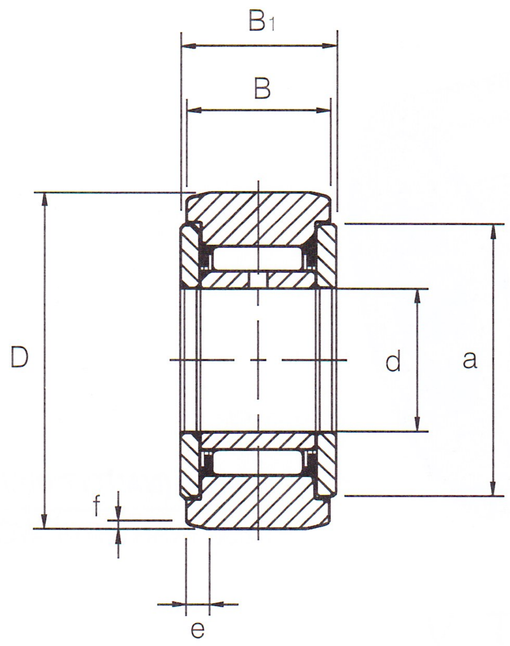

NAST..ZZ

축경 (Bore diameter) mm d	호 칭 번 호 (Bearing No.)				D
	원통외륜 (Cylindrical outer ring)		구면외륜 (Crowned outer ring)		
	씰 없음 (Unsealed)	씰 부착 (Sealed)	씰 없음 (Unsealed)	씰 부착 (Sealed)	
6	NAST 6ZZ	NAST 6ZZUU	NAST 6ZZR	NAST 6ZZUUR	19
8	NAST 8ZZ	NAST 8ZZUU	NAST 8ZZR	NAST 8ZZUUR	24
10	NAST 10ZZ	NAST 10ZZUU	NAST 10ZZR	NAST 10ZZUUR	30
12	NAST 12ZZ	NAST 12ZZUU	NAST 12ZZR	NAST 12ZZUUR	32
15	NAST 15ZZ	NAST 15ZZUU	NAST 15ZZR	NAST 15ZZUUR	35
17	NAST 17ZZ	NAST 17ZZUU	NAST 17ZZR	NAST 17ZZUUR	40
20	NAST 20ZZ	NAST 20ZZUU	NAST 20ZZR	NAST 20ZZUUR	47
25	NAST 25ZZ	NAST 25ZZUU	NAST 25ZZR	NAST 25ZZUUR	52
30	NAST 30ZZ	NAST 30ZZUU	NAST 30ZZR	NAST 30ZZUUR	62
35	NAST 35ZZ	NAST 35ZZUU	NAST 35ZZR	NAST 35ZZUUR	72
40	NAST 40ZZ	NAST 40ZZUU	NAST 40ZZR	NAST 40ZZUUR	80
45	NAST 45ZZ	NAST 45ZZUU	NAST 45ZZR	NAST 45ZZUUR	85
50	NAST 50ZZ	NAST 50ZZUU	NAST 50ZZR	NAST 50ZZUUR	90

YOKE TYPE TRACK ROLLERS

케이지형, mm치수, 내륜, 외륜 및 측판 분할형

PRECISION CAGE TYPE

METRIC DIMENSION

SEPARABLE INNER AND OUTER RING AND RETAINING WASHER

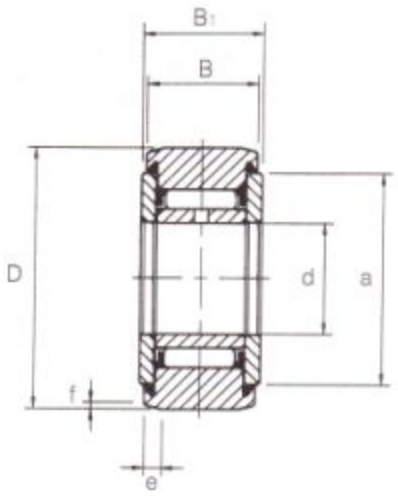

NAST..ZZUU

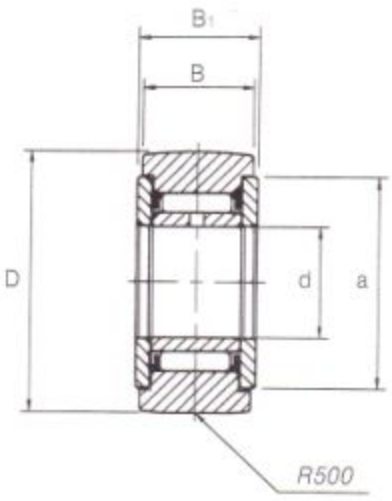

NAST..ZZR

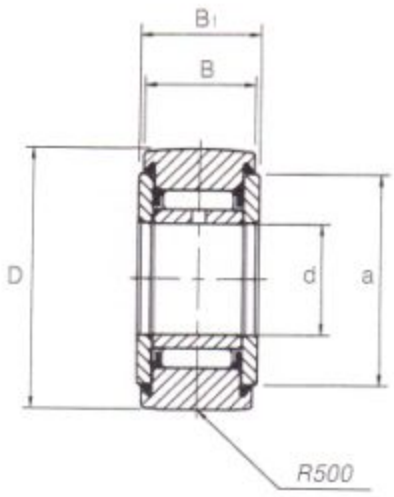

NAST..ZZUUR

주 요 치 수 (Dimensions) mm					중 량 (Weight) gr.	기본 동정격 하중 (Basic dynamic load ratings) C Kgf	기본 정정격 하중 (Basic static load ratings) Co Kgf	트랙 부하 용량 (Track capacity) Kgf	허용 회전수 (Limiting speed) rpm
B	B1	a	e	f					
13.8	14	14	2.5	0.8	24.5	370	290	320/120	20,000
13.8	14	17.5	2.5	0.8	39	510	380	410/160	17,000
15.8	16	23.5	2.5	0.8	65	880	640	630/210	15,000
15.8	16	25.5	2.5	0.8	75	940	710	670/240	13,000
15.8	16	29	2.5	0.8	83	1,110	920	730/270	10,000
19.8	20	32.5	3	1	135	1,580	1,340	1,070/320	9,500
19.8	20	38	3	1	195	1,740	1,560	1,260/390	8,500
19.8	20	43	3	1	225	1,870	1,790	1,390/450	7,000
24.8	25	50.5	4	1.2	400	2,740	2,850	2,020/570	5,500
24.8	25	58	4	1.2	550	2,910	3,170	2,340/700	5,000
25.8	26	66	4	1.2	710	3,220	3,800	2,760/800	4,000
25.8	26	72	4	1.2	760	3,360	4,110	2,930/870	4,000
25.8	26	76	4	1.2	830	3,500	4,430	3,100/940	3,500

▶註 "e" 및 "f"의 값은 원통 외륜에만 적용됩니다.
The values of "e" and "f" apply to cylindrical outer rings only.

▶註 트랙 부하 용량에 관련해서는 앞에 있는 수치값은 원통 외륜을 나타내며 후자는 구면 외륜을 보여줍니다.
With respect to track capacity, the former reveals the values of cylindrical outer rings and the latter, the values of crowned outer ring.