STUD TYPE TRACK ROLLERS

STAINLESS STEEL

충진형, inch치수
FULL COMPLEMENT OF NEEDLE ROLLER
INCH DIMENSION

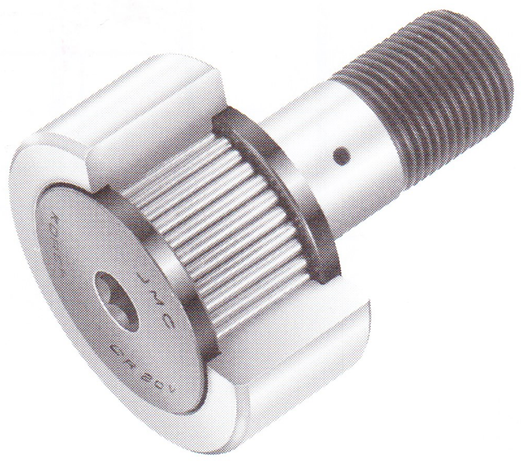

CR..VM

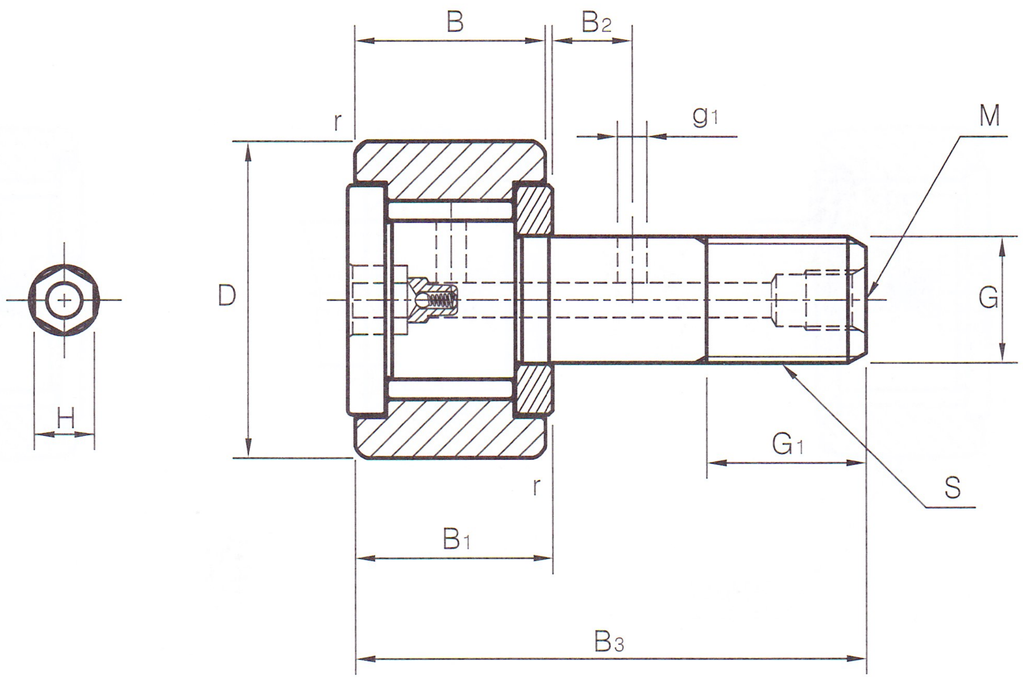

CR..VM

스터드경 (Stud diameter) G mm (inch)	호 칭 번 호 (Bearing No.)				질량 (Mass) gr.	주 요 치 수 (Dimensions) inch / mm					
	씰 없음 (Unsealed)		씰 부착 (Sealed)								
	원통외륜 (Cylindrical outer ring)	구면외륜 (Crowned outer ring)	원통외륜 (Cylindrical outer ring)	구면외륜 (Crowned outer ring)		H mm	D		나 사 (Thread sizes) UNF S	B	
	CR..VM	CR..VMR	CR..VMUU	CR..VMUUR							
4.826	CR 8VM	CR 8VMR	CR 8VMUU	CR 8VMUUR	9	3	1/2	12.700	NO.10-32	11/32	8.731
	CR 8-1VM	CR 8-1VMR	CR 8-1VMUU	CR 8-1VMUUR	10	3	1/2	12.700	NO.10-32	3/8	9.525
6.350 (1/4)	CR 10VM	CR 10VMR	CR 10VMUU	CR 10VMUUR	19	3	5/8	15.875	1/4 - 28	13/32	10.319
	CR 10-1VM	CR 10-1VMR	CR 10-1VMUU	CR 10-1VMUUR	21	3	5/8	15.875	1/4 - 28	7/16	11.112
9.525 (3/8)	CR 12VM	CR 12VMR	CR 12VMUU	CR 12VMUUR	35	4	3/4	19.050	3/8 - 24	1/2	12.700
	CR 14VM	CR 14VMR	CR 14VMUU	CR 14VMUUR	46	4	7/8	22.225	3/8 - 24	1/2	12.700
11.112 (7/16)	CR 16VM	CR 16VMR	CR 16VMUU	CR 16VMUUR	73	6	1	25.400	7/16 -20	5/8	15.875
	CR 18VM	CR 18VMR	CR 18VMUU	CR 18VMUUR	88	6	1 1/8	28.575	7/16 -20	5/8	15.875
12.700 (1/2)	CR 20VM	CR 20VMR	CR 20VMUU	CR 20VMUUR	132	6	1 1/4	31.750	1/2 - 20	3/4	19.050
	CR 22VM	CR 22VMR	CR 22VMUU	CR 22VMUUR	157	6	1 3/8	34.925	1/2 - 20	3/4	19.050
15.875 (5/8)	CR 24VM	CR 24VMR	CR 24VMUU	CR 24VMUUR	225	6	1 1/2	38.100	5/8 - 18	7/8	22.225
	CR 26VM	CR 26VMR	CR 26VMUU	CR 26VMUUR	260	6	1 5/8	41.275	5/8 - 18	7/8	22.225
19.050 (3/4)	CR 28VM	CR 28VMR	CR 28VMUU	CR 28VMUUR	365	8	1 3/4	44.450	3/4 - 16	1	25.400
	CR 30VM	CR 30VMR	CR 30VMUU	CR 30VMUUR	410	8	1 7/8	47.625	3/4 - 16	1	25.400
22.225 (7/8)	CR 32VM	CR 32VMR	CR 32VMUU	CR 32VMUUR	615	8	2	50.800	7/8 - 14	1 1/4	31.750
	CR 36VM	CR 36VMR	CR 36VMUU	CR 36VMUUR	750	8	2 1/4	57.150	7/8 - 14	1 1/4	31.750

▶註 이 품목은 주문에 의하여 생산합니다.
These types are produced on customer's request.

STUD TYPE TRACK ROLLERS

충진형, inch치수
FULL COMPLEMENT OF NEEDLE ROLLER
INCH DIMENSION

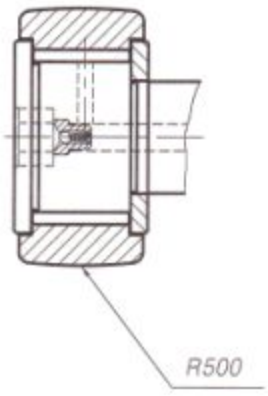

CR..VMR

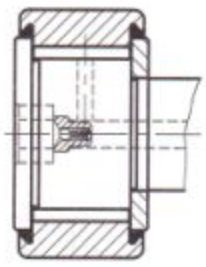

CR..VMUU

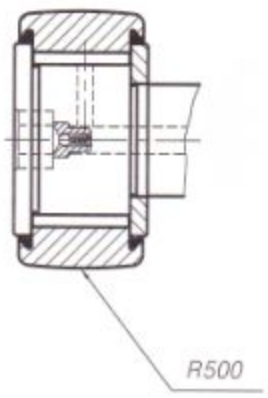

CR..VMUUR

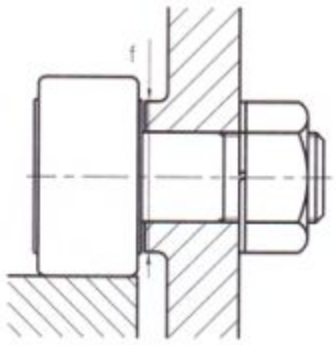

주 요 치 수 (Dimensions) inch / mm												설치치수 f 최소 (Minimum Clamping Diameter) inch/mm		기본 동정격하중 (Basic dynamic load ratings) C Kgf	기본 정정격하중 (Basic static load ratings) Co Kgf	허용 회전수 (Limiting speed) rpm
B1		B3		M mm	g1 mm	G1		B2		r						
3/8	9.525	7/8	22.225	-	-	1/4	6.350	-	-	1/64	0.397	21/64	8.334	390	430	12,000
13/32	10.319	1 1/32	26.194	-	-	1/4	6.350	-	-	1/64	0.397	21/64	8.334	430	500	
7/16	11.112	1 1/16	26.988	-	-	5/16	7.938	-	-	1/64	0.397	29/64	11.509	530	700	9,000
15/32	11.906	1 7/32	30.956	-	-	5/16	7.938	-	-	1/64	0.397	29/64	11.509	590	780	
17/32	13.494	1 13/32	35.719	3.9	2.381	3/8	9.525	1/4	6.350	1/32	0.794	17/32	13.494	800	1,130	7,000
17/32	13.494	1 13/32	35.719	3.9	2.381	3/8	9.525	1/4	6.350	1/32	0.794	19/32	15.081	800	1,130	
21/32	16.669	1 21/32	42.069	M6×1	3.175	1/2	12.700	1/4	6.350	3/64	1.191	45/64	17.859	1,200	2,080	6,000
21/32	16.669	1 21/32	42.069	M6×1	3.175	1/2	12.700	1/4	6.350	1/16	1.588	3/4	19.050	1,200	2,080	
25/32	19.844	2 1/32	51.594	M6×1	3.175	5/8	15.875	5/16	7.938	1/16	1.588	55/64	21.828	2,160	2,910	6,000
25/32	19.844	2 1/32	51.594	M6×1	3.175	5/8	15.875	5/16	7.938	1/16	1.588	55/64	21.828	2,160	2,910	
29/32	23.019	2 13/32	61.119	M6×1	3.969	3/4	19.050	3/8	9.525	1/16	1.588	1 3/64	26.196	2,580	3,680	4,500
29/32	23.019	2 13/32	61.119	M6×1	3.969	3/4	19.050	3/8	9.525	1/16	1.588	1 3/64	26.196	2,580	3,680	
1 1/32	26.194	2 25/32	70.644	M6×1	3.969	7/8	22.225	7/16	11.112	1/16	1.588	1 9/32	32.543	3,230	5,100	3,500
1 1/32	26.194	2 25/32	70.644	M6×1	3.969	7/8	22.225	7/16	11.112	1/16	1.588	1 9/32	32.543	3,230	5,100	
1 9/32	32.544	3 9/32	83.344	M6×1	4.762	1	25.400	1/2	12.700	1/16	1.588	1 15/32	37.306	4,190	7,400	3,500
1 9/32	32.544	3 9/32	83.344	M6×1	4.762	1	25.400	1/2	12.700	1/16	1.588	1 15/32	37.306	4,190	7,400	

▶註 조립 또는 오일 공급후 육각마개를 필히 막아야 합니다.
After assembly and oil lubrication, a hexagonal resin plug should be necessarily stopped up.