STUD TYPE TRACK ROLLERS

케이지형, inch치수
CAGE TYPE
INCH DIMENSION

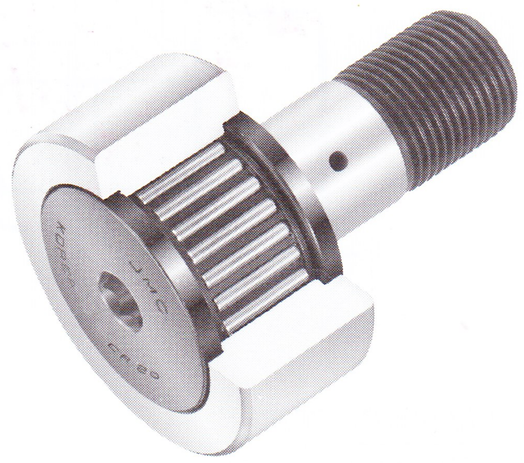

CR

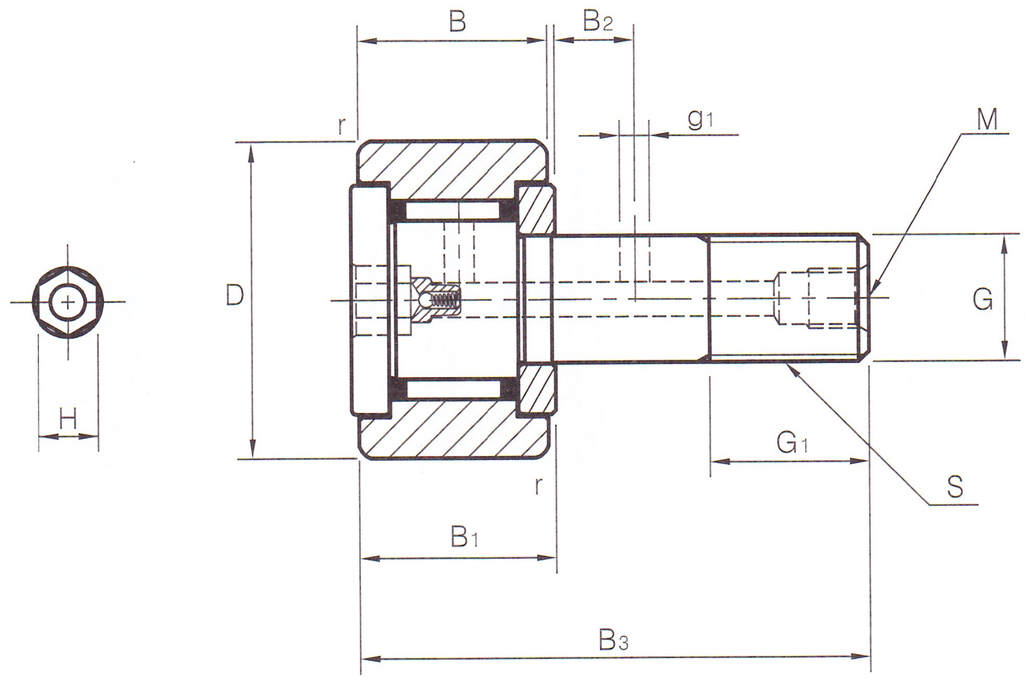

CR..

스터드경 (Stud diameter) G mm (inch)	호 칭 번 호 (Bearing No.) 씰 없음 (Unsealed) 원통외륜 (Cylindrical outer ring) CR..	씰 없음 (Unsealed) 구면외륜 (Crowned outer ring) CR..R	씰 부착 (Sealed) 원통외륜 (Cylindrical outer ring) CR..UU	씰 부착 (Sealed) 구면외륜 (Crowned outer ring) CR..UUR	질 량 (Mass) gr.	주 요 치 수 (Dimensions) inch / mm H mm	D		나 사 (Thread sizes) UNF S	B	
4.826	CR 8	CR 8R	CR 8UU	CR 8UUR	9	3	1/2	12.700	NO.10-32	11/32	8.731
	CR 8-1	CR 8-1R	CR 8-1UU	CR 8-1UUR	10	3	1/2	12.700	NO.10-32	3/8	9.525
6.350 (1/4)	CR 10	CR 10R	CR 10UU	CR 10UUR	19	3	5/8	15.875	1/4 - 28	13/32	10.319
	CR 10-1	CR 10-1R	CR 10-1UU	CR 10-1UUR	21	3	5/8	15.875	1/4 - 28	7/16	11.112
9.525 (3/8)	CR 12	CR 12R	CR 12UU	CR 12UUR	35	4	3/4	19.050	3/8 - 24	1/2	12.700
	CR 14	CR 14R	CR 14UU	CR 14UUR	46	4	7/8	22.225	3/8 - 24	1/2	12.700
11.112 (7/16)	CR 16	CR 16R	CR 16UU	CR 16UUR	73	6	1	25.400	7/16 -20	5/8	15.875
	CR 18	CR 18R	CR 18UU	CR 18UUR	88	6	1 1/8	28.575	7/16 -20	5/8	15.875
12.700 (1/2)	CR 20	CR 20R	CR 20UU	CR 20UUR	132	6	1 1/4	31.750	1/2 - 20	3/4	19.050
	CR 22	CR 22R	CR 22UU	CR 22UUR	157	6	1 3/8	34.925	1/2 - 20	3/4	19.050
15.875 (5/8)	CR 24	CR 24R	CR 24UU	CR 24UUR	225	6	1 1/2	38.100	5/8 - 18	7/8	22.225
	CR 26	CR 26R	CR 26UU	CR 26UUR	260	6	1 5/8	41.275	5/8 - 18	7/8	22.225
19.050 (3/4)	CR 28	CR 28R	CR 28UU	CR 28UUR	365	8	1 3/4	44.450	3/4 - 16	1	25.400
	CR 30	CR 30R	CR 30UU	CR 30UUR	410	8	1 7/8	47.625	3/4 - 16	1	25.400
22.225 (7/8)	CR 32	CR 32R	CR 32UU	CR 32UUR	615	8	2	50.800	7/8 - 14	1 1/4	31.750
	CR 36	CR 36R	CR 36UU	CR 36UUR	750	8	2 1/4	57.150	7/8 - 14	1 1/4	31.750

STUD TYPE TRACK ROLLERS

케이지형, inch치수
CAGE TYPE
INCH DIMENSION

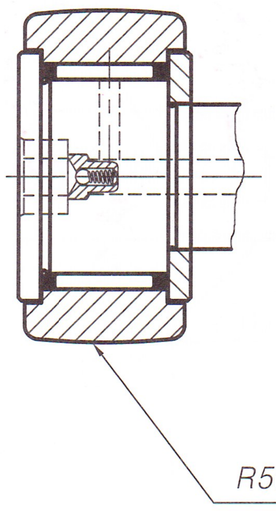

CR..R

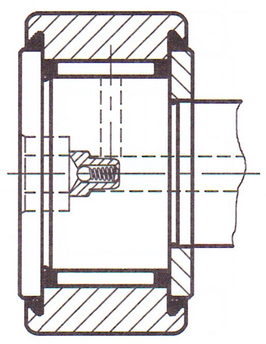

CR..UU

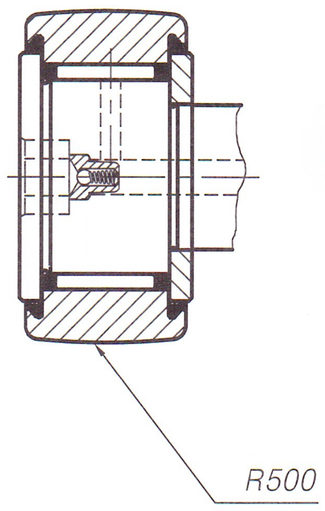

CR..UUR

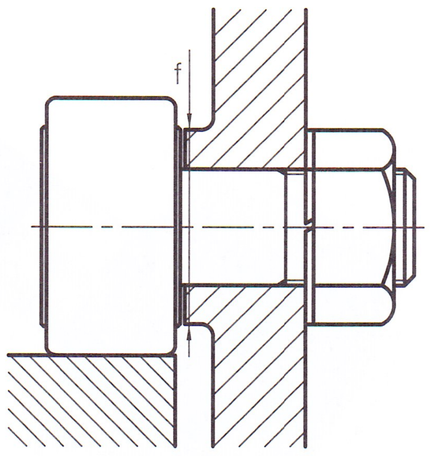

주 요 치 수 (Dimensions) inch / mm												설치치수 f 최소 (Minimum Clamping Diameter) inch/mm		기 본 동정격하중 (Basic dynamic load ratings) C Kgf	기 본 정정격하중 (Basic static load ratings) Co Kgf	허 용 회전수 (Limiting speed) rpm
B1		B3		M mm	g1 mm	G1		B2		r						
3/8	9.525	7/8	22.225	-	-	1/4	6.350	-	-	1/64	0.397	21/64	8.334	230	200	28,000
13/32	10.319	1 1/32	26.194	-	-	1/4	6.350	-	-	1/64	0.397	21/64	8.334	230	200	28,000
7/16	11.112	1 1/16	26.988	-	-	5/16	7.938	-	-	1/64	0.397	29/64	11.509	330	330	21,000
15/32	11.906	1 7/32	30.956	-	-	5/16	7.938	-	-	1/64	0.397	29/64	11.509	330	330	21,000
17/32	13.494	1 13/32	35.719	3.9	2.381	3/8	9.525	1/4	6.350	1/32	0.794	17/32	13.494	410	470	15,000
17/32	13.494	1 13/32	35.719	3.9	2.381	3/8	9.525	1/4	6.350	1/32	0.794	19/32	15.081	440	530	14,000
21/32	16.669	1 21/32	42.069	M6×1	3.175	1/2	12.700	1/4	6.350	3/64	1.191	45/64	17.859	810	990	13,000
21/32	16.669	1 21/32	42.069	M6×1	3.175	1/2	12.700	1/4	6.350	1/16	1.588	3/4	19.050	850	1,060	12,000
25/32	19.844	2 1/32	51.594	M6×1	3.175	5/8	15.875	5/16	7.938	1/16	1.588	55/64	21.828	1,310	1,470	11,000
25/32	19.844	2 1/32	51.594	M6×1	3.175	5/8	15.875	5/16	7.938	1/16	1.588	55/64	21.828	1,310	1,470	11,000
29/32	23.019	2 13/32	61.119	M6×1	3.969	3/4	19.050	3/8	9.525	1/16	1.588	1 3/64	26.196	1,700	2,220	8,500
29/32	23.019	2 13/32	61.119	M6×1	3.969	3/4	19.050	3/8	9.525	1/16	1.588	1 3/64	26.196	1,700	2,220	8,500
1 1/32	26.194	2 25/32	70.644	M6×1	3.969	7/8	22.225	7/16	11.112	1/16	1.588	1 9/32	32.543	2,300	3,510	7,000
1 1/32	26.194	2 25/32	70.644	M6×1	3.969	7/8	22.225	7/16	11.112	1/16	1.588	1 9/32	32.543	2,300	3,510	7,000
1 9/32	32.544	3 9/32	83.344	M6×1	4.762	1	25.400	1/2	12.700	1/16	1.588	1 15/32	37.306	2,980	5,860	5,500
1 9/32	32.544	3 9/32	83.344	M6×1	4.762	1	25.400	1/2	12.700	1/16	1.588	1 15/32	37.306	2,980	5,860	5,500

▶註 조립 또는 오일 공급후 육각마개를 필히 막아야 합니다.
After assembly and oil lubrication, a hexagonal resin plug should be necessarily stopped up.