Bearing Roller Chains

轴承滚子型

Ball bearing chain (滚珠轴承链)

This chain contains ball bearings inside the rollers.
Low rotating frictional force of the roller allows minimal operational loss and high allowable load compared to other rollers.

- Dimensions of the assembled chain and attachments are identical to general conveyor chains.
- General conveyor chain sprockets are used.
- Coefficient of rotating friction f : 0.035~0.05

此链条在滚子中使用了球形轴承，降低了滚子旋转过程中的摩擦力，使其比其他类型滚子在运转过程中产生更小的磨损且承载更大重量。

- 链条及附件大小规格与普通输送链一致
- 适用普通输送链链轮
- 旋转摩擦系数F：0.035~0.05

Type-BR

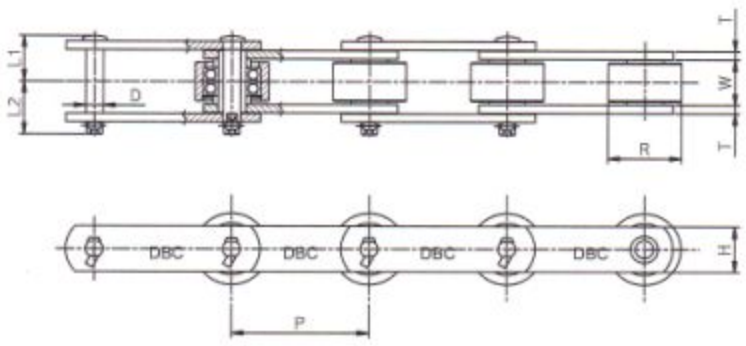

Type-BF

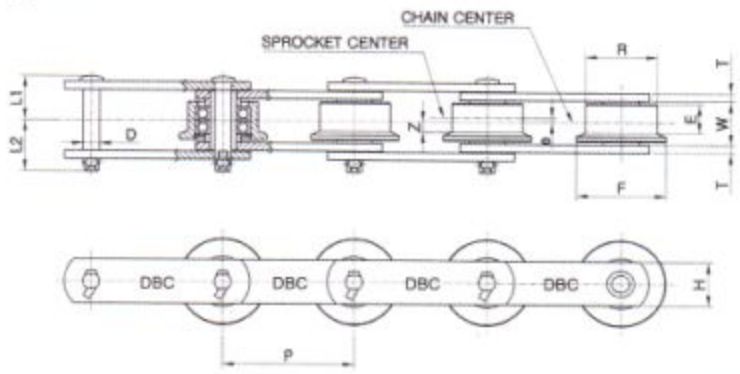

unit : mm

DONG BO Chain No.			Pitch	Roller Diameter	F-Roller Dimentions					Inner Width	Plate		Pin			Max. Allowable Load of Roller (kg/each)		Standard Series	Heavy Series	R-Roller	F-Roller
Basic Chain		Type of Roller	P	R	R	F	E	e	Z		T	H	D	L1	L2	R-Roller	F-Roller				
DBC	05100	BR·BF	100	40	40	50	14	2.5	4.5	22	4.5	32	11.1	24.6	29.6	310	200	3,000	7,100	5.0	5.2
	05150	BR·BF	150																	4.4	4.2
DBC	08150	BR·BF	150	44.5	44.5	55	20	3	7	27	6.3	28.6	11.1	30.7	35.7	420	270	8,000	11,500	5.5	5.8
DBC	10100	BR·BF	100	50.8	50.8	65	20	3	7	30	6.3	38.1	14.3	32.7	39.2	560(790)	350	11,500	23,000	9.8	10.3
	10125	BR·BF	125																	8.7	8.9
	10150	BR·BF	150																	7.9	8.1
DBC	6205	BR·BF	152.4	57.2	57.2	70	25	3.5	9	37.1	7.9	44.5	15.9	40	46.5	850(1,200)	560	19,000	28,500	12.1	12.4
DBC	12200	BR·BF	200	65	65	80	24	4	8	37.1	7.9	44.5	15.9	40	46.5	850(1,200)	560	19,000	28,500	11.4	11.9
	12250	BR·BF	250																	10.3	10.6
DBC	212	BR·BF	152.4	69.9	69.9	85	25	4	8.5	37.1	9.5	50.8	19.05	44.2	52.7	1,440(2,000)	1000	25,000	39,500	17.1	18
DBC	17200	BR·BF	200	80	80	100	34	5	12	51.4	9.5	50.8	19.05	51.5	60	1,440(2,000)	1000	25,000	39,500	18.8	19.8
	17250	BR·BF	250																	16.5	17.3
	17300	BR·BF	300																	15.0	15.7
DBC	26200	BR·BF	200	100	100	125	38	6	13	57.2	9.5	63.5	22.2	55.2	62.7	2,000(2,800)	1400	32,000	53,000	29	31
	26250	BR·BF	250																	25.3	26.2
	26300	BR·BF	300																	22.3	23.6
	26450	BR·BF	450																	18.0	18.9
DBC	36250	BR·BF	250	125	125	150	49	8	16.5	77	12.7	90	35	77	84	2,800(3,900)	1900	48,500	69,500	42.7	45.8
	36300	BR·BF	300																	39.0	
	36450	BR·BF	450																	30.7	31.9

Note) Numbers within ( ) are used when two bearings are contained in one roller.
注: ( ) 内数字表示一个滚子两个轴承

Needle bearing chains (滚针轴承链)

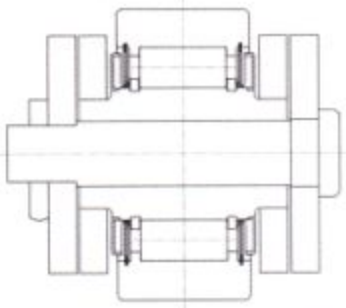

Section of Roller 滚子部面图

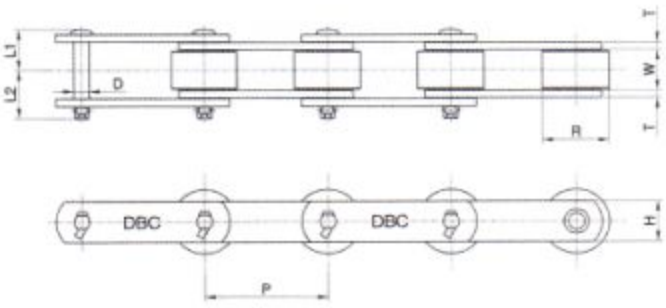

Type-NBR

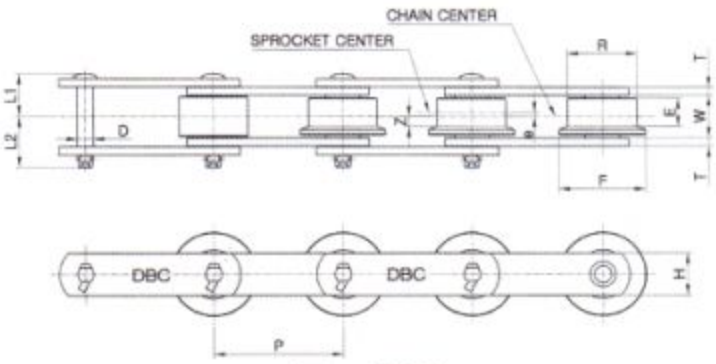

Type-NBF

unit : mm

DONG BO Chain No.		Pitch	Roller Dia meter		F-Roller Dimentions					Inner Width	Plate		Pin			Max Allowable Load of Roller (kg/each)		Avg. Breaking Load(kgf)		Weight	
Basic Chain	Type of Roller	P	R	E	R	F	E	e	Z	W	T	H	D	L1	L2	R-Roller	F-Roller	Standard Series	Heavy Series	R-Roller	F-Roller
DBC 03075	NBR·NBF	75	31.8	15.5	31.8	42	12	1.8	4.3	16.1	3.2	22	7.9	17.5	19.5	200	130	3.000	7.100	2.7	2.8
DBC 03100	NBR·NBF	100																		2.3	2.4
DBC 05100	NBR·NBF	100	40	19	40	50	14	2.5	4.5	22	4.5	32	11.1	24.6	29.6	310	200	7.000	14.500	5.0	5.2
DBC 05150	NBR·NBF	150																		4.1	4.2
DBC 450	NBR·NBF	101.6	44.5	23	44.5	55	20	3	7	27	6.3	28.6	11.1	30.7	35.7	420	270	8.000	14.500	6.8	7.2
DBC 08150	NBR·NBF	150	44.5	23	44.5	55	20	3	7	27	6.3	28.6	11.1	30.7	35.7	420	270	8.000	14.500	5.5	5.6
DBC 10100	NBR·NBF	100																		9.8	10.3
DBC 10125	NBR·NBF	125	50.8	27	50.8	65	20	3	7	30	6.3	31.8	14.3	32.7	39.2	560	350	11.500	23.000	8.7	8.9
DBC 10150	NBR·NBF	150																		7.9	8.1
DBC 6205	NBR·NBF	152.4	57.2	32	57.2	70	25	3.5	9	37.1	7.9	44.5	15.9	40	46.5	850	560	19.000	28.500	12.1	12.4
DBC 12200	NBR·NBF	200	65	32	65	80	24	4	8	37.1	7.9	44.5	15.9	40	46.5	850	560	19.000	28.500	11.4	11.9
DBC 12250	NBR·NBF	250																		10.3	10.6
DBC 212	NBR·NBF	152.4	69.9	32.5	69.9	85	25	4	8.5	37.1	9.5	50.8	19.05	44.2	52.7	1.440	1.000	25.000	39.500	17.1	18
DBC 17200	NBR·NBF	200																		18.8	19.8
DBC 17250	NBR·NBF	250	80	44	80	100	34	5	12	51.4	9.5	50.8	19.05	51.5	60	1.440	1.000	25.000	39.500	16.5	17.3
DBC 17300	NBR·NBF	300																		15.0	15.7
DBC 26200	NBR·NBF	200																		29.0	31.0
DBC 26250	NBR·NBF	250	100	50	100	125	38	6	13	57.2	9.5	63.5	22.2	55.2	62.7	2.000	1.400	32.000	53.000	25.3	26.2
DBC 26300	NBR·NBF	300																		22.2	23.6
DBC 26450	NBR·NBF	450																		18.0	18.9
DBC 36300	NBR·NBF	300																		42.7	45.8
DBC 36450	NBR·NBF	450	125	56	125	150	49	8	16.5	77	12.7	90	35	77	84	2.800	1.900	48.500	69.500	39.0	40.1
DBC 36600	NBR·NBF	600																		30.7	31.9